DREES & SOMMER

DESIGNING THE SMART, ADAPTIVE, AND SUSTAINABLE BATTERY MEGAFACTORY OF THE FUTURE

Maren Gahr

Hungarian Battery Days 04.11.2026



https://www.zeit.de/2025/54/batteriefabrik-salzgitter-vw-elektroauto-batteriezellen-produktion-china

FACTS AND FIGURES

Status May 2026

>1 MILLION SQM OF INDUSTRIAL CONSTRUCTION PER YEAR

PROJECT EXPERIENCE ALL ACROSS EUROPE

HOUSE INTERNAL CLEAN AND DRY ROOM EXPERTS

independent



ACTIVE IN BATTERY FIELD IN EUROPE SINCE 2017

> 300 GWHS

HIGH EXPERIENCE IN BATTERY CELL PRODUCTION PROJECTS

1970
founded

> 6,500
employees

> 80
locations worldwide

6,922
Construction projects 2025

€ 1,017.1 million
Group sales 2025

© MS Office Library

DREES & SOMMER

INTEGRATED DESIGN APPROACH

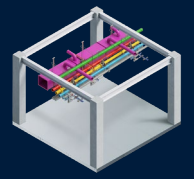

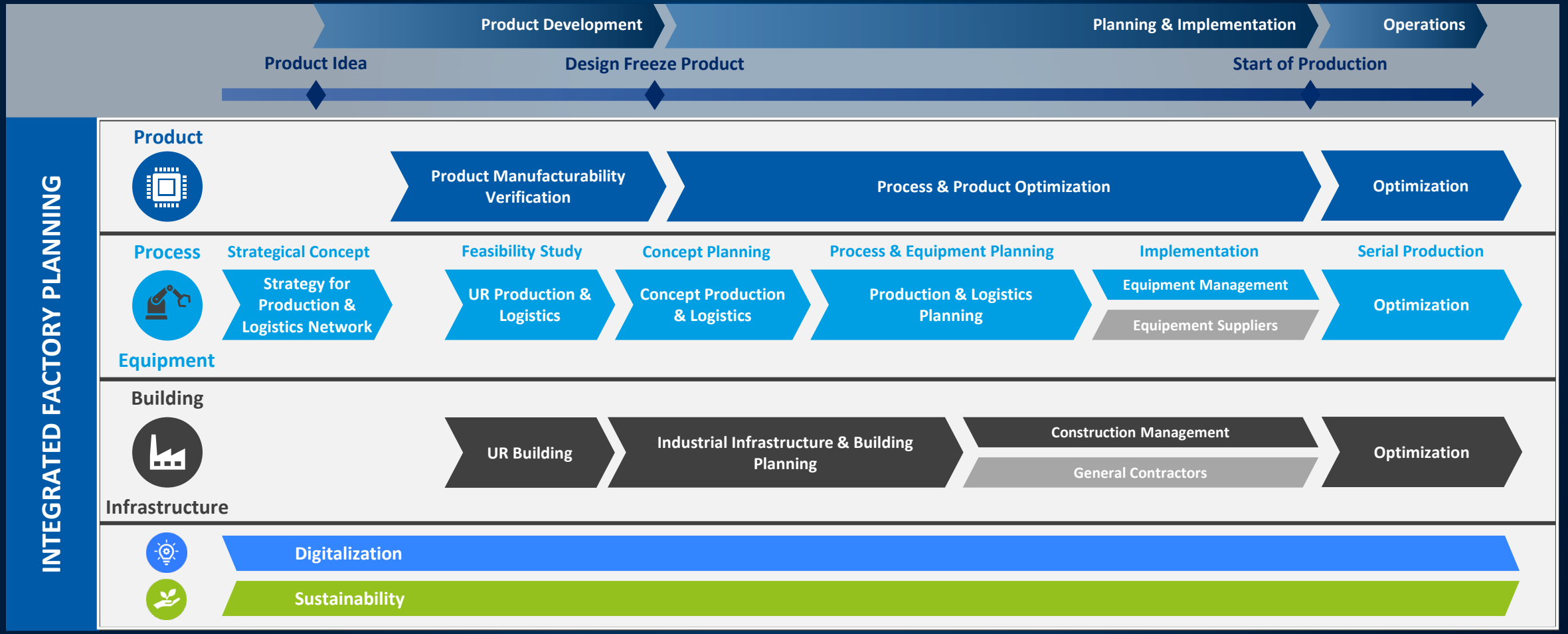

DREES & SOMMER

FACTORY LIFECYCLE MANAGEMENT

From digital building blocks to modular factory design

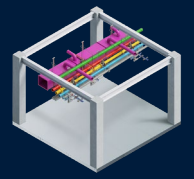

Module components

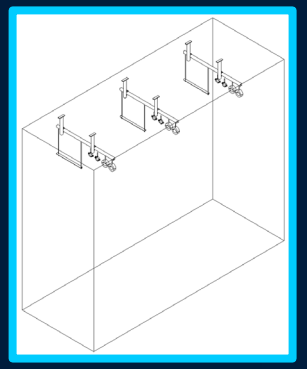

Support

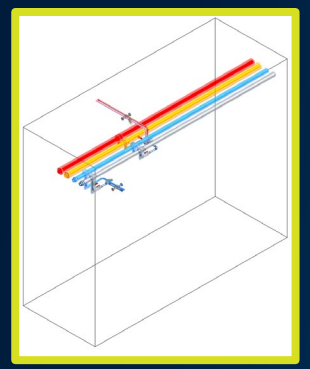

HVAC

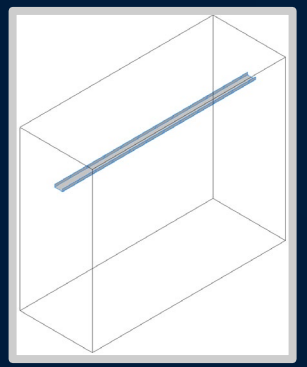

Electricity

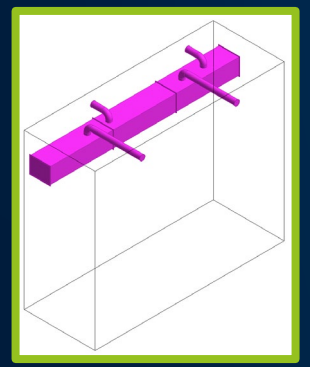

Ventilation

MEP-Module

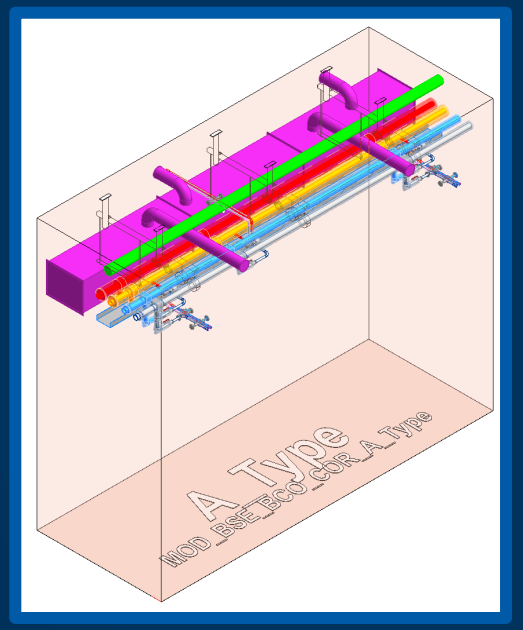

Efficient Design

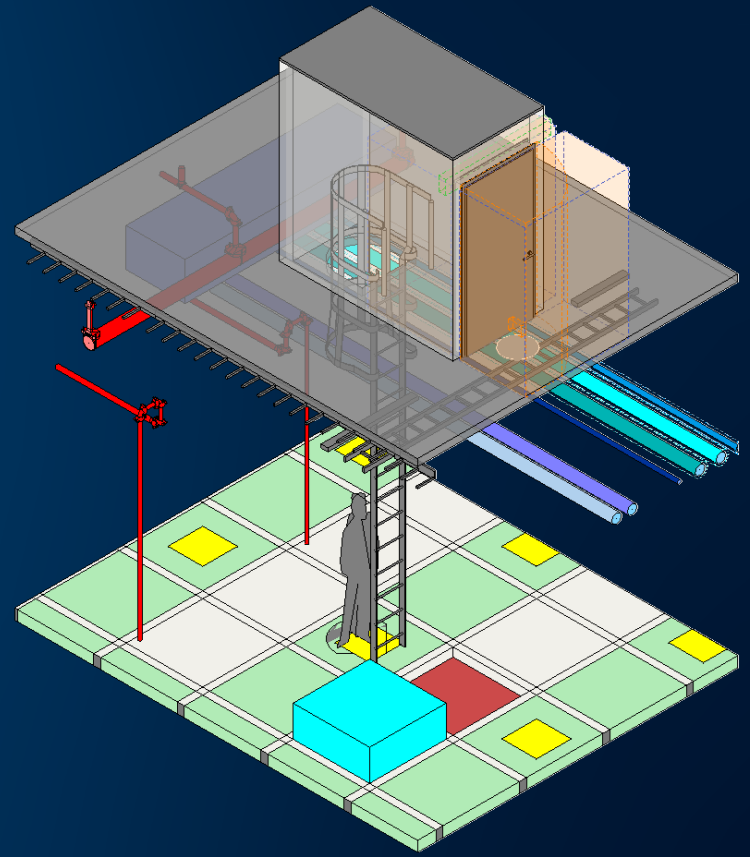

© MS Office Library

DREES & SOMMER

DIGITAL PLANNING – HOW IT WORKS

Collaborative, model- and data-based planning with a Digital Handover (Digital Twin-ready) as output

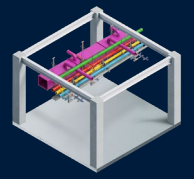

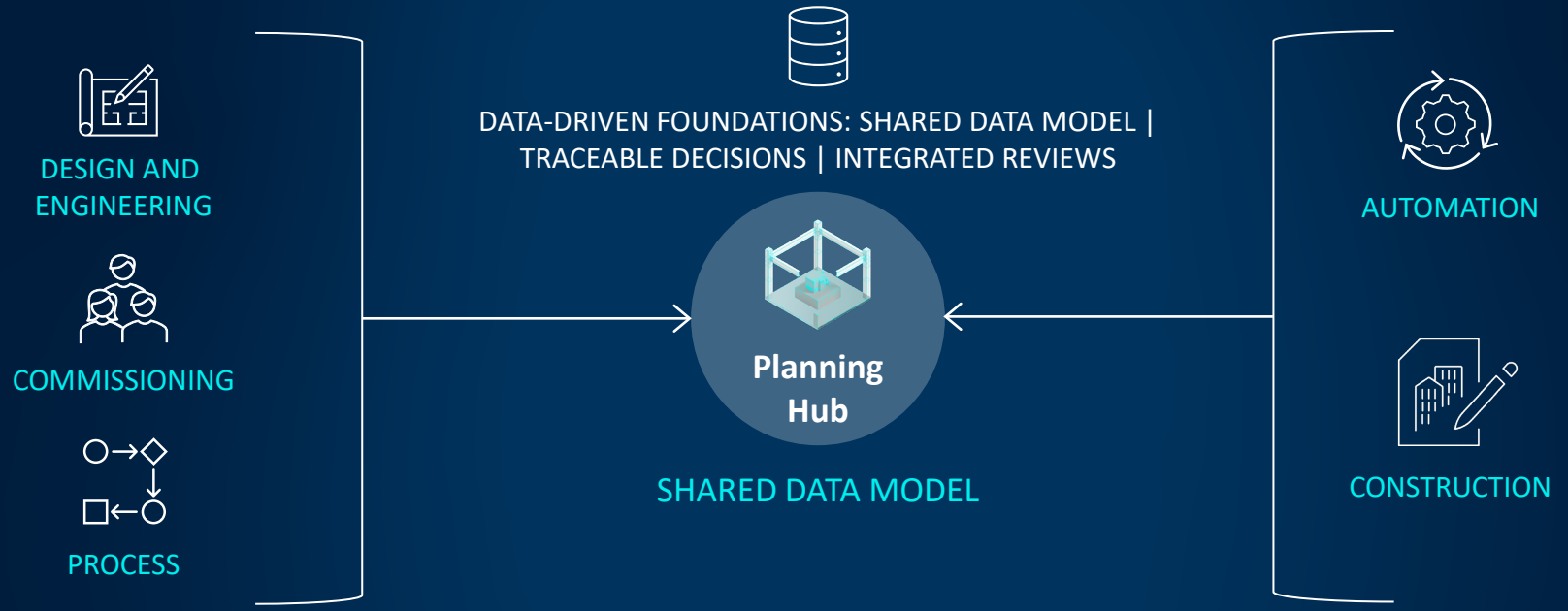

Shared Data Model

One consistent information model across disciplines – enabling data-driven decisions, fewer translations and less data loss.

Integrated Reviews

Cross-functional reviews at defined milestones–issues are detected earlier and decisions are documented and traceable.

End-to-End Flow

Continuous planning from concept to commissioning – supported by data feedback loops and clear ownership.

Digital Twin Output

A structured digital handover package that serve as a foundation for an operational digital twin.

DREES & SOMMER

SENSORIZED ENVIRONMENT – THE INFRASTRUCTURE FOR PHYSICAL AI

Real-time data meets simulation: Digital Twin as operational intelligence

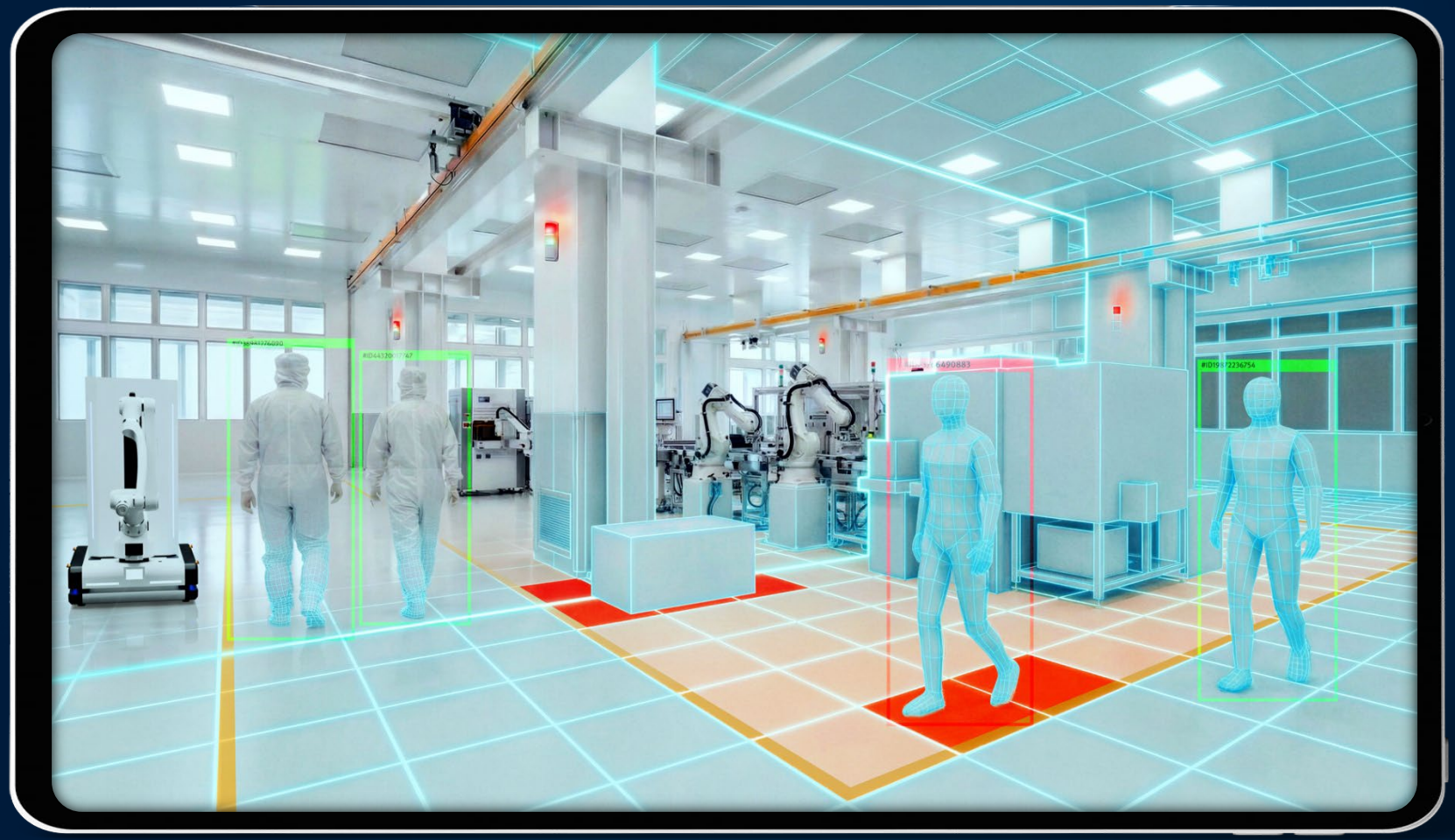

DREES & SOMMER

SENSORIZED ENVIRONMENT – THE INFRASTRUCTURE FOR PHYSICAL AI

System Role and Challenge



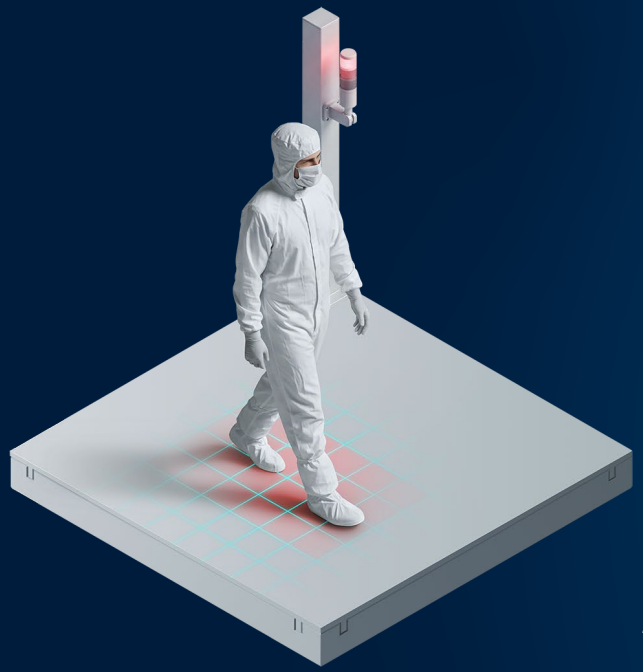

System Role

MAKE THE PHYSICAL WORLD READABLE FOR AI

A sensorized environment captures live data from assets and processes, turning the physical factory into an accurate digital twin that enables safer, more efficient and more resilient operations.

Challenge

MISSING DATA LEADS TO WRONG RESULTS

Without comprehensive live data, AI and automation lack context – causing blind spots, incorrect outputs and unreliable performance.

Outcome intent

LIVE INSIGHTS ENABLING AI BASED PRODUCTIVITY GAINS

Real-time data and virtual validation improve ramp-up, increase transparency and allow every cycle to continuously enhance system performance.

Structured Data Accessibility for better Performance

A sensorized environment creates a live, data-rich digital twin of all assets and processes – enabling real-time insights, safer operations and continuous optimization.

DREES & SOMMER

SENSORIZED ENVIRONMENT – HOW IT WORKS

Real-time data meets simulation: Digital Twin as operational intelligence



Processes

Building Modell (3D)

Environmental Sensors

Asset Data (OT)

IT Systems (ERP, …)

SENSORIZED ENVIRONMENT



Digital Twin
Live Geometric Data (NVIDIA Omniverse)



FLM
Live and Historic Non-Geometric Data

Simulation
inside Omniverse, based on realistic historic data

Live Monitoring
Constant insights

Event Driven Automation
AI driven reaction to events

Plan → Simulate
Omniverse validates designs before physical build – test scenarios, identify bottlenecks.

Validate → Build
Virtual commissioning eliminates surprises – decisions based on simulation, not guesswork.

Monitor → Learn
IoT sensors feed real-time data back to Digital Twin – continuous optimization loop.

Predictive Intelligence
AI analyzes patterns for process and quality optimization – problems detected before they occur.

DREES & SOMMER

YOUR ADVANTAGE THROUGH VIRTUAL COMMISSIONING

Through the consistent and integrated use

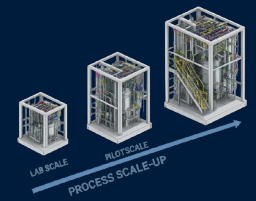

	DESIGN	COMMISSIONING	OPERATION
COST / SAVINGS	Reduction in change costs due to planning errors by **50 %**	Cost reduction through VCOM for components, equipment, and infrastructure by **30 %**	Efficiency gains of 2% per year through continuous system optimization (CIP)
QUALITY	Ensuring the quality of planning in terms of functionality and milestones	Early and comprehensive simulation and validation of the ramp-up	Integrated simulation and assessment of the impact on the overall system

In particular, design interfaces between buildings, battery-specific infrastructure, and production facilities

In particular, ensuring the safety of equipment installation and removal procedures

SIGNIFICANT END-TO-END IMPROVEMENTS IN COST, QUALITY, AND TIME!

© MS Office Library

DREES & SOMMER

EXECUTION ENGINE FOR RAMP-UP STABILIZATION

Combining factory integration, process expertise, and data-driven production control

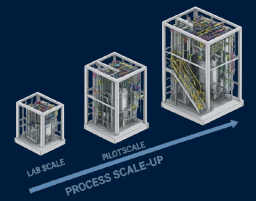

EXPERTISE LAYER

Decision & Control

1 PROCESS ENGINEERING CAPABILITY — Process Understanding

2 LINE & EQUIP. INTEGRATION — Equip. fit & Integration

3 QTY & FAILURE ENGINEERING — Root Cause & Quality

4 RAMP-UP EXECUTION — Execution & Stabilization

PRODUCTION KPIs

Measured Impact on Production Performance

Closed-loop Control & Learning

EXECUTION LAYER

Production Reality

DATA FOUNDATION

QUALITY DATA POINTS

MACHINE EXECUTION PARAMETERS

Front-End Assembly → Back-End Assembly

INTEGRATED ANALYSIS & OPTIMIZATION

- Systematic control of CPPs across the entire process chain
- Data-driven decisions at every step
- Proactive issue detection & rapid resolution
- Accelerated ramp-up, stable high-yield production

Actively manage the transition from installed capacity → usable production capacity

CPP = Critical process parameters
CQA= Critical Quality Attributes

DREES & SOMMER

SYSTEM LOGIC

How modules connect and compound across the complete lifecycle

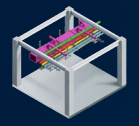

MODULAR DESIGN

Standards and Methods

Pre-validated modules,
repeatable quality



SENSORIZED ENVIRONMENT

Validation and Simulation

Single Source of Truth,
Governance, Audit Trails

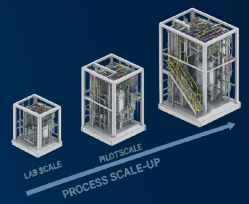

SCALE-UP STABILIZATION

Operation

Combining factory integration,
process expertise,
and data-driven
production control

LEARNING LOOP

Insights flow back to
Factory Lifecycle Management

DREES & SOMMER

INTEGRATED PROJECT APPROACH – OUTCOMES AND KPIS

Boosting AI Accuracy via Physical-World Information

–20%

OPEX REDUCTION

Real-time data and structured insights enable process improvements, AI-supported optimization and more efficient operations.

AI-Ready

BUILT ENVIRONMENT

A unified, sensorized digital twin provides a plug-ready foundation for monitoring, control and scalable AI/robotic automation.

Stable

RAMP-UP AND OPERATION

Simulate first, operate second: virtual commissioning and live feedback reduce risks and ensure smoother, more transparent operations.



SYSTEM CONTRIBUTION

Better Data → Better AI results → Better overall performance

DREES & SOMMER

100%+ PRODUCTIVITY
MODULAR. DIGITAL. SMART.



© AI generated – Drees & Sommer

Drees & Sommer



Hungarian Battery-Days | 04th of

© Midjourney – KI generated – Drees & Sommer

DREES & SOMMER

KONTAKT

Connect via LinkedIn



MAREN GAHR

Director Center of Competence Battery

+49 172 7699902
maren.gahr@dreso.com

www.dreso.com

DREES & SOMMER

UNITING OPPOSITES TO CREATE A WORLD WE WANT TO LIVE IN

Drees & Sommer